ISKRAEMECO

Energy Measurement and Management

P2LPC

Data Concentrator

*The **P2LPC** data concentrator is intended for automatic data collection from Mx351 and Mx371 family of electricity meters for AMR systems. Communication with the electricity meters for AMR systems is performed via low-voltage network (DLC) in compliance with the DLMS/COSEM communication protocol. **P2LPC** is based on a single board computer (SBC), running on the Microsoft Windows CE operating system. Software application in **P2LPC** is responsible for finding, reading and managing two-way communications with the electricity meters for AMR systems over DLC network, storing read data into the internal memory as well as for data transfer to the collection centre. For communication with the data collecting centre different communication paths are available – PSTN, ISDN, GSM, GPRS and Ethernet, using standard Internet protocols – PPP, TCP/IP and FTP. Optionally **P2LPC** can be equipped with external RF modem for reading electricity meters for AMR systems with built-in RF modem.*

***P2LPC** is designed and manufactured in conformity with the ISO 9001 standard.*

MAIN CHARACTERISTICS

- Communication with the meters through the DLC network or RF (optional)
- ''Plug and Play'' - automatic finding, installing and deinstalling of the meters
- up to 1024 meters can be handled with one P2LPC
- Saving of data into a non-volatile memory
- Communication with data collecting centre over PSTN, ISDN, GSM, GPRS and Ethernet
- DLMS/COSEM protocol for communication with the meters
- Standard Internet protocols (PPP, TCP/IP and FTP) for communication with the data collecting centre
- Microsoft Windows CE operating system, file system
- Remote monitoring and controlling of the P2LPC functioning

CONCENTRATOR FUNCTION

The P2LPC application runs on a single board computer (SBC) with the Microsoft Windows CE operating system as a multithreading application. Multiple threads run simultaneously, each of them is responsible for different functionalities of P2LPC which can be divided in the following parts:

- **DLC networking**: detecting, installing and deinstalling of the meters, checking of the communication quality. In case of bad conditions on the DLC network up to 7 meters (in one chain) can be automatically set in a repeating mode for transferring data from and to the distant meters with which direct communication can not be established.
- **Meter readout**: it is a periodic task performed by an adjustable time schedule. Results from the meters are stored into the files. Each meter has its own file for each month. DLMS/COSEM protocol is performed for communication with the meters. Simplified OSI model communication stack, defined in standards IEC 62056 – 46 (DATA LINK LAYER USING HDLC-PROTOCOL) and IEC 62056 – 52, is used. P2LPC uses a DLC modem on the physical layer. Special software driver takes care for sending and receiving data to the DLC modem, making the DLC modem transparent for upper communications layers. DLMS uses HDLC protocol for data link layer. HDLC frames, type 2 (DLMS UA 1000-3, IEC 1334-4-42) are used. A standard DLMC/COSEM communication protocol is implemented on the application layer.
- **Meter configuration and control**: it is intended for remote changing of a tariff structure, load control, …
- **Data storage**: Microsoft Windows CE file system is used for storing data. A new file is created for each meter and for each month. There are three types of the files containing meters data: registers, load profile and events (log book). All files are stored on data storage memory. In order to save memory space the files can be compressed. Zipped file size for each meter and for each month takes about 10kB (2kB registers, 6kB load profile and 2kB log book). 45 Mbytes of memory space are reserved for the meter data files. All data files, older than 3 months are deleted automatically.
- **Communication with data collecting centre** is possible by a modem module or Ethernet LAN connection. For communication with the modem module the Remote Access Server – RAS is used. RAS uses the PPP protocol (RFC 1661) to establish and maintain peer-to-peer connection with a data communication centre. If the P2LPC is configured for connection to the GPRS network, P2LPC establishes connection to GPRS network and maintains it (redial/configure if it is lost). P2LPC in this configuration acts as client (opposite to RAS where it acts as a server). On the transport layer a TCP/IP stack is used. On the upper layer of the TCP/IP stack, Windows socket interface is exposed to the applications. These applications are an FTP server for transfering of meters readout files, SNMP for management and NTP for time related functions. All these applications are standard Internet applications defined in many RFCs. The files are received in the data collecting centre by the Iskraemeco SEP2Collect software and stored into database for further processing.

Maintenance, programming as well as checking of P2LPC functioning can be performed locally via Ethernet interface or remotely via modem, GPRS or Ethernet interface. Various kinds of information, like a list of installed meters, data transactions, readout schedules, running operations as well as data files can be observed on P2LPC. From a Command menu some actions can be forced, like finding new meters, deinstalling meters, forking meters and reading a schedule. Parameters as well as data files are saved in form of xml files. Statistics as well as logging information are also saved on P2LPC. Operations performed by P2LPC application threads are logged into the text file. There are three types of logging information – errors, warnings and information. This file can be open to track thread execution. Statistics about the communication via DLC network is also written into the text file. In this file you can see how many meters are installed on P2LPC, time stamps when meters were installed, and forked or lost from DLC network. Quality of data transfer over a DLC modem and availability of meters can also be seen on that file.

DLC MODEM

The integrated DLC modem enables data transmission through the low voltage network between the concentrator and the meters. It supports serial asynchronous communication with 4800 bit/s baud-rate. The actual data transmission baud-rate through the low voltage grid depends of the momentary conditions in the grid. DLC modem control software supports sending and receiving data on all three phases simultaneously or on each phase separately.

- **Type of modulation**

Spread FSK (S-FSK) with two narrow band carriers (currently on 93600 Hz and 83200 Hz – they can be also be matched to the customers requirements).

- **Baud rate**

1200 bps over grid (in severe conditions 300 bps possible)

- **The level of injected signal**
  In compliance with EN 50065 – wide band modulation
  - meters 134 dB/uV – one phase coupling
  - meters 128 dB/uV – three-phase coupling
  - P2LPC concentrator 128 dB/uV – three-phase coupling
- **Type of coupling**

Capacitive, electrically isolated

- **Type of communication**

Two-way, half-duplex

- **Communication structure**
  Master (data concentrator) – Slave (meter)
  - **Modes of operation**
    Polling, broadcast
  - **Repeater mode**
    Self-adaptive, based on S/N measurement of both sub-carriers
  - **Auto logging of nodes**
    Yes
  - **Power consumption (DLC part)**
    300 mA / 5 V

EXTERNAL RF MODEM

External RF modem can be used for communication with meters equipped with an RF modem. RF communication is based on a modified RADIAN 433 protocol. The protocol itself is the output of RADIAN user group. Used frequency bands are license free, but they can be adapted to the national or even customer's needs. Nominal frequency is 433.82 MHz. However, it can also be adapted to 444.625 MHz, 444.925 MHz or 444.950 MHz.

Nominal voltage	3x230/400 V, 3x400 V other voltages on request
Voltage range	0.8 Un ... 1.15 Un
Nominal frequency	50 Hz or 60 Hz
Operating temperature	-20°C ... +60°C
Storage temperature	-40°C ... +80°C
Power consumption	25 W max

BLOCK DIAGRAM

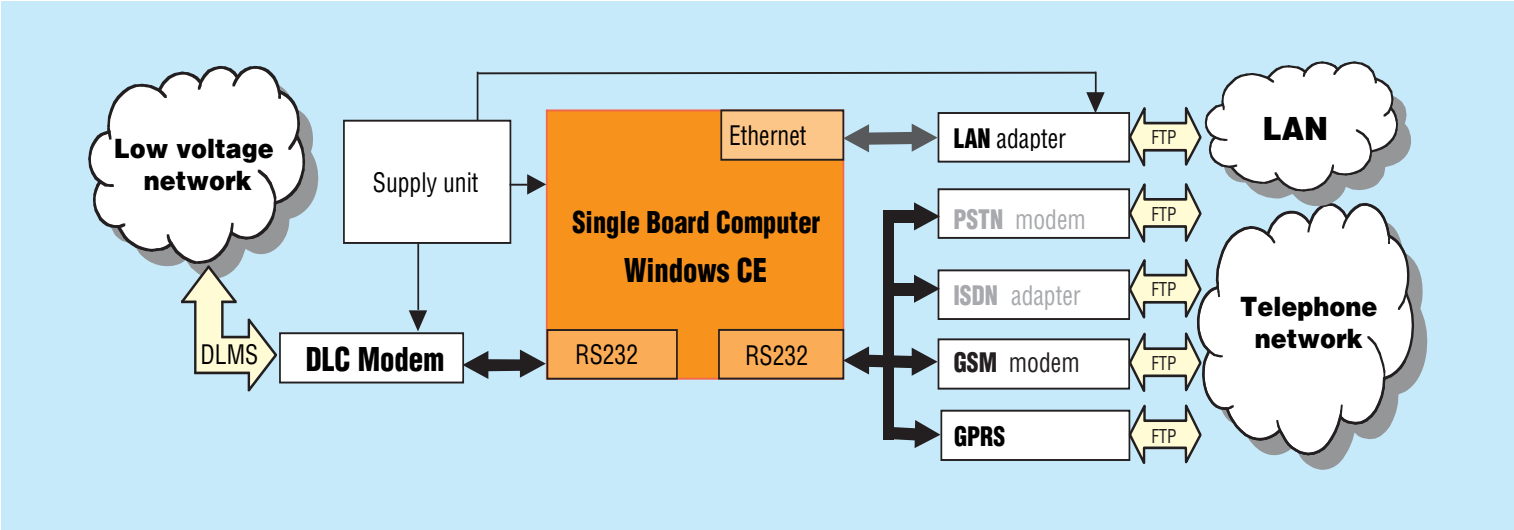

OVERALL AND FIXING DIMENSIONS

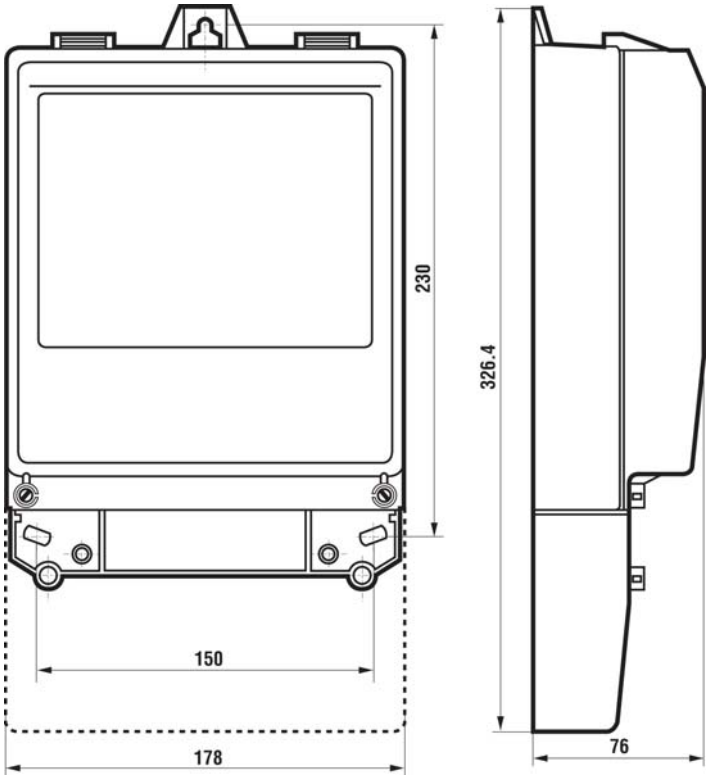

Owing to periodical improvements of our products the supplied products can differ in some details from the data stated in the prospectus material.

0509/15

Iskraemeco, Energy Measurement and Management
4000 Kranj, Savska loka 4, Slovenia
Telephone: (+386 4) 206 40 00, Telefax: (+386 4) 206 43 76,
http://www.iskraemeco.si, e-mail: info@iskraemeco.si
Published by Iskraemeco. Data subject to alteration without notice.

Iskraemeco, Energy Measurement and Management
17th Cleopatra st., Heliopolis, Cairo Egypt
Telephone: (+202) 22909830, Fax: (+202) 24180984,
e-mail: info.iskra@iskraemeco.com.eg
Published by Iskraemeco. Data subject to alteration without notice.

722.999.186